COMPACT EXCAVATOR

TAKEUCHI

From World First to World Leader

TB153FR



Operating Weight: 5,725 kg

Product Features & Specifications

ENGINE

- EU Stage III A / EPA Interim Tier 4 Emission Compliant
- Automatic Fuel Bleed System
- Double Element Air Cleaner (optional)
- Engine Preheat
- High Capacity Radiator and Hydraulic Oil Cooler
- High Capacity Fuel Filters
- Extended Life Coolant

ELECTRICAL

- Multi-Informational Display
- 12 volt System with 40 amp Alternator
- Work Lights: Canopy - ROPS and Boom
- Work Lights: Cab - Front Pillar and Boom
- Beacon Socket
- Battery Switch
- Travel Alarm (optional)
- Horn
- Hour Meter

OPERATOR'S STATION

- ROPS / TOPS / OPG Level I
- Deluxe High Back Suspension Seat
- Head Rest (optional)
- 2" Retractable Seat Belt
- Cab with Heat Defrost, Windshield Wiper and Washer, Skylight, AM / FM / MP3 Radio
- Air Conditioner (Cab optional)
- OPG Level I Front Guard (Cab optional)

UNDERCARRIAGE AND FRAME

- Triple Flanged Track Rollers
- 2-Speed Travel with Automatic Shift
- High Torque Planetary Final Drive
- Large Wraparound Counterweight
- 2" Retractable Seat Belt
- 400 mm Rubber Crawlers
- 400 mm Steel Crawlers (optional)
- Rubber Pads for 400 mm Steel Crawlers (optional)

HYDRAULIC

- Variable Displacement, Open Center Hydraulics
- Straight Travel Circuit
- Large Hydraulic Reservoir with Fluid Level Sight Gauge
- Hydraulic Joystick Controls
- Service Port 1 with on/off Switch
- High Flow for Service Port 1 (optional)
- Proportional Control for Service Port 1 (optional)
- Proportional Control for Service Port 2 (optional)
- Service Port 3 for Quick Hitch (optional)
- Hydraulic Selector Valve (1-way / 2-way)
- Pilot Accumulator (optional)
- Air Breather, Hydraulic Tank

WORKING EQUIPMENT

- Full Rotation Capability and Patented STS Boom
- Cushioned Boom, Arm, and Offset Cylinders
- Auxiliary Hydraulic Circuit Plumbed to Arm
- 1,450 mm Arm
- 1,760 mm Arm (optional)
- Arm and Boom Holding Valve with Lift Alarm (optional)
- Pattern Change Valve (ISO or G) (optional)



Side to Side Boom Design



Automotive Styled Interior

TOUGH, POWERFUL, RELIABLE


Hydraulic Pilot Joysticks



Wraparound Counterweight


Triple Flanged Track Rollers


Work Lights

The patented side-to-side (STS) offset boom combined with the tight tail swing on the TB153FR provides unmatched visibility to the work equipment and enables it to rotate fully with very little overhang.

Its low center of gravity and optimized counterweight placement creates an extremely stable platform with lifting capabilities similar to that of a conventional machine.

The TB153FR also come standard with 2 speed travel with automatic step down motors that provide torque on demand when pushing, climeing, or turning in high speed mode.

Serviceability on the TB153FR is simple with the tilt-up cab that provides access to the engine and hydraulic components. Rear access to the machine allows convenient access to daily checks and routine maintenance points.



A tilt-able cabin and large lockable service hoods provide outstanding maintenance access.

OPERATING PERFORMANCE	
Operating Weight - Cab	5,725 kg
Operating Weight - Canopy	5,625 kg
Bucket Capacity (Heaped)	0.141 m³
Slew Speed	9.9 min-1
Travel Speed	
1st	2.7 km/h
2nd	5.1 km/h
Gradeability	30°
Ground Pressure - Cab	32.4 kPa
Ground Pressure - Canopy	31.9 kPa
Maximum Bucket Breakout Force	36.3 kN
Maximum Arm Digging Force	25.2 kN
Traction Force	56.1 kN
Boom Swing Angle (Left/Right)	30° / 15°

ENGINE	
Model	Yanmar / 4TNV88
Rated Output (ISO 14396)	29.5 kW / 2,400 min-1
Maximum Torque	143.4 Nm / 1,440 min-1
Displacement	2,189 ml
Alternator	12 V - 0.48 kW
Battery (IEC 60095-1)	12 V - 72 A•h

FLUID CAPACITY	
Engine Lubrication	7.4 L
Cooling System	8.8 L
Fuel Tank Capacity	65.0 L
Hydraulic Reservoir Capacity	68.0 L
Hydraulic System Capacity	110.0 L

HYDRAULIC SYSTEM	
P1, P2	Variable Displacement Pump
Flow Rate	58.3 L/min
Relief Pressure	21.0 MPa
P3	Gear Pump
Flow Rate	38.9 L/min
Relief Pressure	20.6 MPa
Service Port 1	
Flow Rate	58.3 L/min
Flow Rate - High Flow	95.0 L/min
Hydraulic Pressure	21.0 MPa
Service Port 2	
Flow Rate	38.9 L/min
Hydraulic Pressure	20.6 MPa
Service Port 3	
Hydraulic Pressure	20.6 MPa

SAFETY and HEALTH	
Vibration Levels	
Hand / Arm	≦ 2.5 m/s²
Body	≦ 0.5 m/s²
Noise Level	
Sound Power Level	L_{WA} 96 dB



Multi-Informational Display



Full Rotation Capability


2 Speed Travel w/ Auto Shift


Auxiliary Hydraulic Lines

TB153FR Compact Excavator

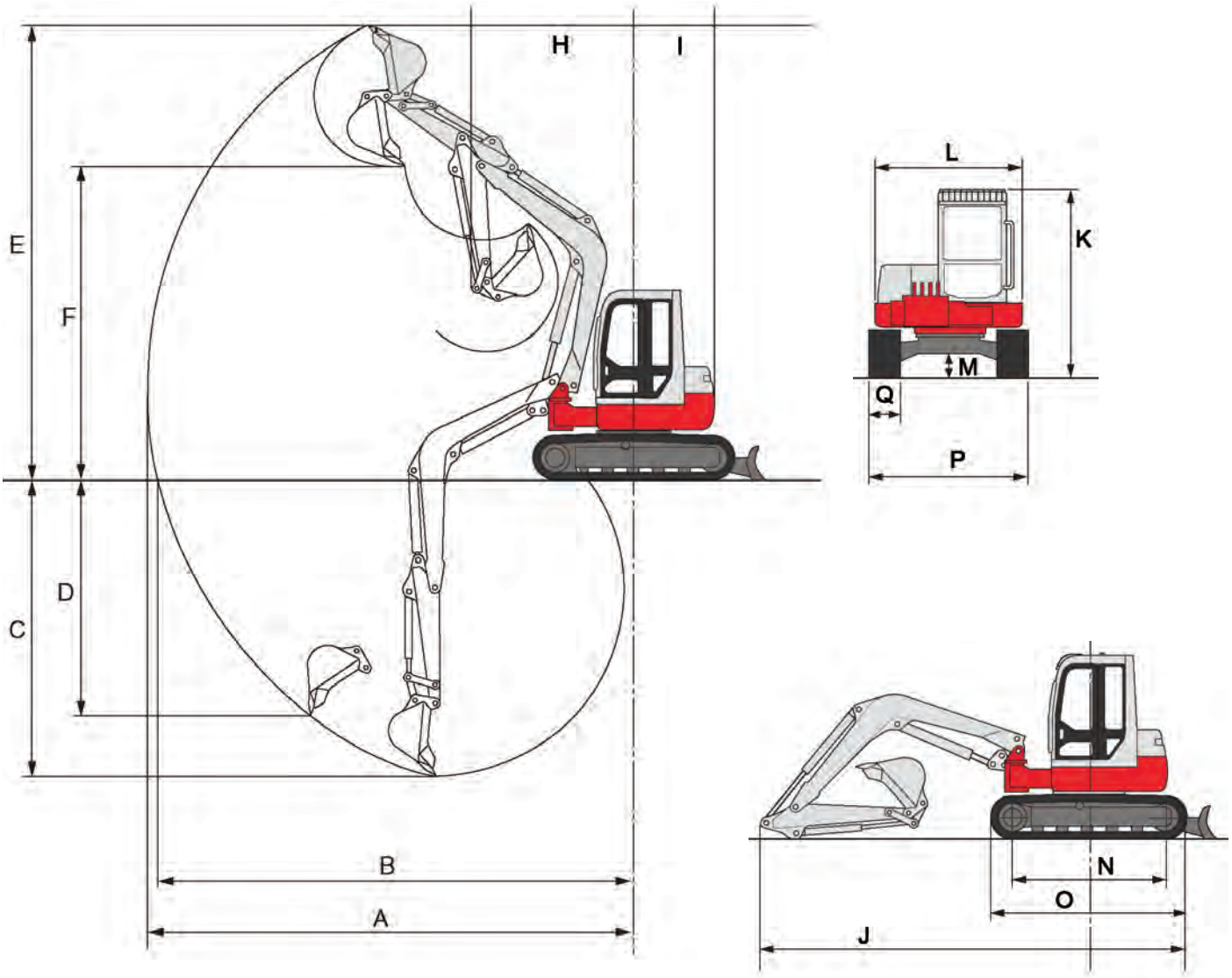

MACHINE DIMENSIONS	1,450 mm ARM	1,760 mm ARM
A Maximum Reach	5,905 mm	6,195 mm
B Maximum Reach at Ground Level	5,765 mm	6,065 mm
C Maximum Digging Depth	3,590 mm	3,900 mm
D Maximum Vertical Digging Depth	2,735 mm	3,030 mm
E Maximum Height of Cutting Edge	5,320 mm	5,490 mm
F Maximum Dumping Height	3,710 mm	3,885 mm
H Front Swing Radius with Boom Offset	1,285 mm	1,400 mm
I Slew Radius	1,110 mm	1,110 mm
J Overall Length	5,330 mm	5,350 mm
K Overall Height (Cab / Canopy)	2,570 mm / 2,585 mm	2,570 mm / 2,585 mm
L Upper Structure Overall Width	1,860 mm	1,860 mm
M Ground Clearance	300 mm	300 mm
N Crawler Base	1,985 mm	1,985 mm
O Crawler Overall Length	2,500 mm	2,500 mm
P Crawler Overall Width	2,000 mm	2,000 mm
Q Crawler Shoe Width	400 mm	400 mm



© 2018 Takeuchi MFG. Co., Ltd. All Rights Reserved. In accordance with our established policy of continued improvement, specifications and features are subject to change without notice. Pictures may show options other than standard equipment.

FORM: TB153FR Compact Excavator Spec Sheet - Mar. 2018

TAKEUCHI™

From World First to World Leader